Fastrack Eagle Project

Design Qualification Test Procedure

for CCTV

Approved by	30.Nov.2011	J.W. Park	
Reviewed by	28.Nov.2011	H.S. Yang	
Written by	25.Nov.2011	J.C. Park	
	Date	Name	Signature

Revision History

Issue	Page	Revision		Date
		From	To	
0			First issue	2011. 10. 31
1	Page 9. Page 10. Page 12. Page 20. Page 21. Page 26. Page 28. Page 33~52.	First issue	Revised - Section “1.6 Test classification” Revised. - Section “1.6.2 Standard Test” Revised. - Section “2.2 Weight” Revised. - Section “2.13 Power consumption” Revised. - Section “2.15 Voltage withstand Test” Revised. - Section “2.18 EMC test: IEC 62236-3-2” Revised. - Section “2.18.2.4 Surges immunity test” Revised. -“Inspection sheet” Revised.	2011.11.30
2				
3				
4				
5				
6				
7				
8				

Contents

1 General 7

1.1 Introduction 7

1.2 Test Procedure 7

1.3 Test Equipment 7

1.4 Expected test schedule and location 7

1.5 Testing Location 7

1.6 Test classification 8

1.6.1 Internal Test (Type & Routine) 8

1.6.2 Standard Test 10

2 Test Procedure 11

2.1 Visual & Dimension Inspection 11

2.2 Weight 12

2.3 PoE Switch Test 13

2.4 Video Resolution Variable Test 13

2.5 Video Frame rate Test 14

2.6 Protocol Test 14

2.7 RTP/RTSP Streaming Test 15

2.8 HDD Capacity 16

2.9 CCTV Monitor Display Resolution 17

2.10 Operation & Combination test 17

2.11 Aging test 18

2.12 Power supply range (Performance) test 19

2.13 Power consumption 19

2.14 Insulation Resistance Test 20

2.15 Voltage withstand Test 21

2.16 Temperature test 21

2.16.1 Dry heat test (EN60068-2-2) 22

2.16.2 Damp heat test (EN60068-2-30) 23

2.16.3 Cooling test (EN60068-2-1) 24

2.17 Semi-Conductor Burn-in Test 25

2.18 EMC test: IEC 62236-3-2 (External Test Facility) 26

2.18.1 Emission tests and limits 26

2.18.1.1 Conducted Emissions 26

2.18.1.2 Radiated Emissions 27

2.18.2 Immunity tests and severities 27

2.18.2.1 Electrostatic Discharge immunity test 27

2.18.2.2 Immunity to Radio –Frequency Electromagnetic Fields 28

2.18.2.3 Electrical Fast Transient/Burst immunity test 28

2.18.2.4 Surges immunity test 28

2.18.2.5 Immunity to conducted disturbances inducted by radio-frequency filed 29

2.19 Shock and Vibration test: IEC61373 (External Test Facility).....30

2.19.1 Vibration test.....31

2.19.2 Shock test.....31

Abbreviations

Abbreviations	Description
CCTV	Close Circuit Television
FPS	Frames per Second
HDD	Hard Disk Drive
HTTP	Hyper-Text Transfer Protocol
IP	Internet Protocol
DVR	Digital Video Recorder
PoE	Power over Ethernet
PSSS	Passenger Saloon Surveillance System
RTP	Real Time Protocol
RTSP	Real Time Streaming Protocol
TCP	Transmission Control Protocol
IEC	INTERNATIONAL ELECTROTECHNICAL COMMISSION
EMC	ELECTROMAGNETIC COMPATIBILITY
EMS	ELECTROMAGNETIC SUSCEPTIBILITY
EMI	ELECTROMAGNETIC INTERFERENCE
NIST	NATIONAL INSTITUTE OF STANDARDS AND TECHNOLOGY
RMS	ROOT MEAN SQUARE
DOC	DECLARATION OF CONFORMITY

1 General

1.1 Introduction

This document contains the procedure for qualification testing of the CCTV system for Denver RTD EMU.

1.2 Test Procedure

The purpose of this document is verifying the procedure about the qualifying examination of the CCTV System at RTD/DTO. The tests to be performed include environmental, shock, vibration, and EMC. At various stages of the qualification test, the CCTV system will be tested to the production test specification with the exception of the hi-pot and megger tests to verify unit function. Due to the degradation of the equipment during a hi-pot and megger test, this will only be performed on the first test and the final test. Testing can be performed in any order depending on test equipment availability.

Test procedures are divided 3 parts.
- TEST FOR EMC,(EMS,EMI), IMPACT AND VIBRATION
- TEST FOR ENVIRONMENT AS LIKE TEMPERATURE AND HUMIDITY
- TEST FOR BASIC STANDARD

.
As follow the test procedures, it should be verified based on the technical standard at each part.

1.3 Test Equipment

No.	Equipment	Drawing NO.
1	Interior Camera	DENVER-INT001
2	Outside Camera	DENVER-OS001
3	Front Facing Camera	DENVER-FFC001
4	CAB Camera	DENVER-CAB001
5	Digital Video Recorder	DENVER-DVR001
6	PoE Switch	DENVER-POE001
7	CCTV Monitor	DENVER-MON001

1.4 Expected test schedule and location

Schedule to visit the test laboratory: 27~29 February. 2012/ EMC, Shock & Vibration [SGS TESCO]
- The schedule and location can be flexible.

1.5 Testing Location

SGS TESCO Korea Co., LTD
398-1, Gomae-dong, Gihung-gu, Youngin-si Gyeonggi-do, 446-901, Republic of Korea

1.6 Test classification

1.6.1 Internal Test (Type & Routine)

The following tests will be carried out to each unit at Inter-M.

	Type test	Routine test	Test Equipment				Relevant Standards
			Cameras	PoE	DVR	Monitor	
Inspection							
Visual	O	O	O	O	O	O	
Dimension	O	O	O	O	O	O	
Weight	O	—	O	O	O	O	
Tests							
PoE (Power Over Ethernet)	O	O	O	O	—	—	
Video Resolution Variable	O	O	O	—	—	—	
Video Frame Rate	O	—	O	—	—	—	
Protocol Test	O	—	—	—	O	—	
RTP/RTSP Streaming	O	—	—	—	O	—	
HDD Capacity	O	—	—	—	O	—	
Display Resolution	O	O	—	—	—	O	
Operation & Combination	O	O	O	O	O	O	
Aging	O	—	O	O	O	O	
Power supply Range	O	—	—	O	O	O	
Power consumption	O	—	—	O	O	O	

Insulation Resistance	O	—	—	O	O	O	IEC 60077-1
Voltage withstand	O	—	—	O	O	O	EN 50155
Temperature	O	—	O	O	O	O	IEC 60068-2-2, IEC 60068-2-30, IEC 60068-2-1
EMC	O	—	O	O	O	O	IEC 62236-3-2
Shock & Vibration	O	—	O	O	O	O	IEC 61373
Note : 8 pieces of cameras can be connectable to one PoE receives the power and operate. Therefore PoE shall test related Power. O = To be tested. — = Not Applicable							

Test Facilities, Equipment and measurement tools

- Vernier Calipers
- Weigh scale
- Laptop computer[Web browser, CMS]
- DC Power Supply
  - MODEL : POWER SUPPLY
  - Manufacture : TDK
  - Model name : GEN150-5-D
  - Input rating : 100-240V ~9.5A 50/60Hz
- Insulation Tester
  - MODEL : WITHSTANDING VOLTAGE TESTER
  - Manufacture: KIKUSUI
  - Model & Serial Number : TOS5051/GG001281

1.6.2 Standard Test

The following tests will be carried out to system at certified site.

No.	Test Specimen	Criteria	Test Item	Test Standard	To be tested	Remark
1	CCTV System	EMC (EMI &EMS)	Conducted Disturbance	CISPR 11	■YES □NO	
2			Radiated Disturbance	CISPR 11	■YES □NO	
3			Electrostatic Discharge	IEC 61000-4-2	■YES □NO	
4			Radio-frequency electromagnetic field. Amplitude modulated	IEC 61000-4-3	■YES □NO	
5			Fast transients	IEC 61000-4-4	■YES □NO	
6			Surges	IEC 61000-4-5	■YES □NO	
7			Radio-frequency common mode	IEC 61000-4-6	■YES □NO	
9		Shock & Vibration	VIBRATION, SHOCK & BUMP TEST	IEC 61373 Edition2.0 :2010 Class 1-A	■YES □NO	
10		Temperature	Temperature	IEC 60068-2-2 IEC 60068-2-30 IEC 60068-2-1	■YES □NO	

2 Test Procedure

2.1 Visual & Dimension Inspection

- Objective

  CCTV equipment should confirm that the construction of equipment to meet the approved drawing and there shall be nothing wrong in appearance (margin of error is mentioned at each drawing). However, any different specification due to customer's request or design change at the late stage of the development shall be tested following the change reasonably.

- Criteria

  Allowable tolerance in drawings

- Test Methodology

  Check the size following the drawing of each component

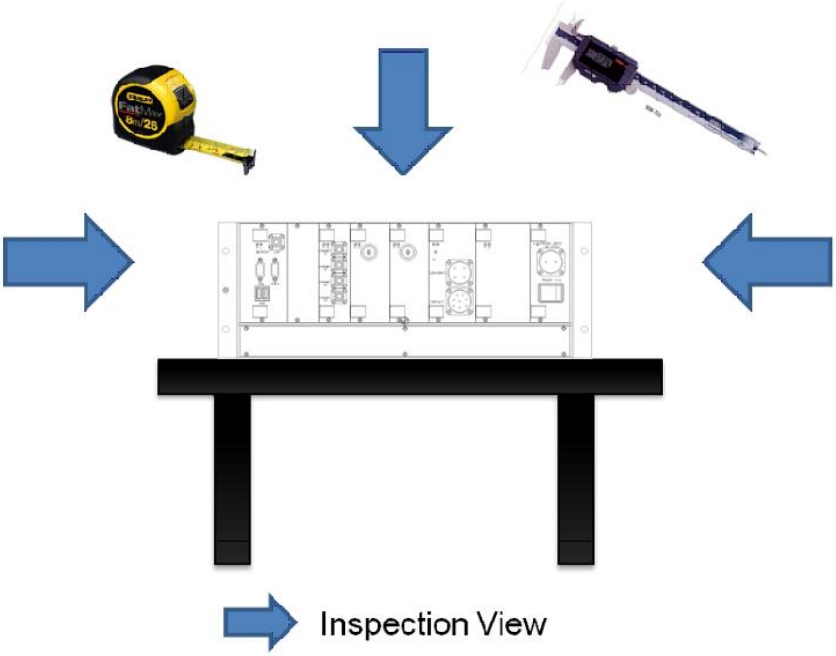

Figure 1. Expected Test Environment for Appearance Inspection

2.2 Weight

- Objective

  Not to cause the installation problem, it should be checked the component weight.

  If the weight is heavier than the standard of design, component can be dropped because of the discord of design on the fixed hall and screw.

- Criteria

  Refer to the below table.

- Test Methodology

  Each equipment's weight measurement shall satisfy with factors below.

No.	Equipment	Drawing Ref.	Criteria
1	Interior Cameras	DENVER-INT001	less than 1.0kg
2	CAB Camera	DENVER-CAB001	less than 1.0kg
3	Front Facing Camera	DENVER-FFC001	less than 2.5kg
4	Outside Camera	DENVER-OS001	less than 3.2kg
5	PoE(Power over Ethernet)	DENVER-PoE0001	less than 4.5kg
6	DVR(Digital Video Recorder)	DENVER-DVR001	less than 10kg
7	CCTV Monitor	DENVER-MON001	less than 3.4kg

Figure 2. Expected Test Environment for Weight Inspection

2.3 PoE Switch Test

- Objective

  Check operation PoE Switch status test after connecting Cameras to PoE ports of PoE Switch.

- Criteria

  Camera shall be turned on. Camera

  The Image of Camera shall be checkable through monitor of Laptop.

- Test Methodology

  Cameras must be operated normally of web browser at the Laptop computer.

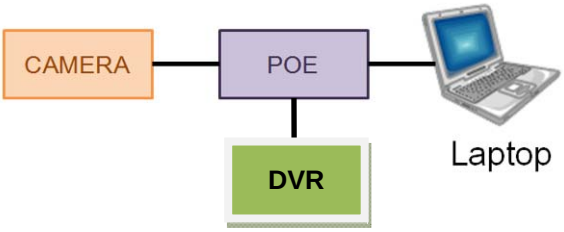

Figure 3. Expected Test Condition for PoE Switch Test

2.4 Video Resolution Variable Test

- Objective

  Check the camera working properly and controlling saving capacity of DVR.

- Criteria

  Video Resolution Variance Range: 720x480 pixels

- Test Methodology

  After organizing the test as in figure 3, the test verifying availability of the variance of Camera video resolution through video recorder is done.

  Refer to the above Test Configuration shown as Figure 5.

2.5 Video Frame rate Test

- Objective

  Check the camera working properly and controlling saving capacity of DVR.

- Criteria

  Criteria of Video Frame rate: 1500Kbps

- Test Methodology

  Check frame rate with Web Browser with live video display

  Refer to the above Test Configuration shown as Figure 3.

2.6 Protocol Test

- Objective

  Check the camera to transmit the proper video image.

  TCP/ IP, HTTP, RTP, RTSP, support check in Spec sheet or Camera web browser.

- Criteria

  TCP/IP: Laptop connect view

  HTTP: Web browser connect view

  Check the RTP/RTSP Streaming Transmission of screen through VLC Software

- Test Methodology

  Refer to the above Test Configuration shown as Figure 4.

2.7 RTP/RTSP Streaming Test

- Objective

  Check the camera to transmit the proper video image to OCC.

- Criteria

  Check the RTP/RTSP Streaming Transmission of screen through VLC Software

- Test Methodology

  Refer to the above Test Configuration shown as Figure 4.

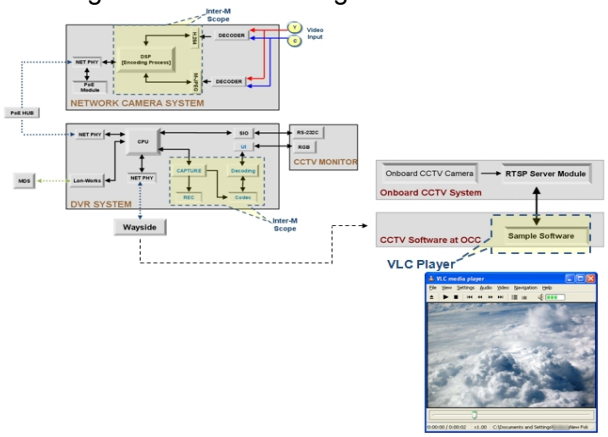

Figure 4. Expected Test Condition for RTSP Streaming Test

2.8 HDD Capacity

- Objective

  Check the HDD Capacity to save 15fps, D1 and 16CH for 72 hours.

- Criteria

  The recorded HDD Capacity should be comprised in the below chart.

- Test Methodology

  Connect 1 camera to DVR and record 1 hour in D1, 15fps, and check the figure should be 500 Mbyte or under(refer to the below chart).

  After identifying the features of video recorder's hardware, it is identified if it is constituted with 2.5" HDD, and the overall sum storage capacity is calculated. 500GigaBytes x 2ea

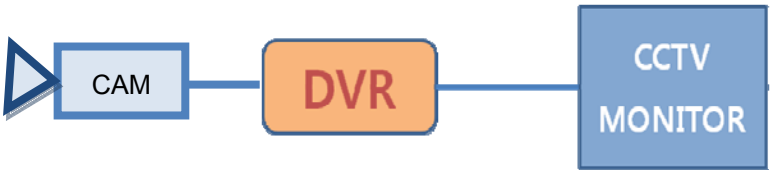

HDD Recording capacity

Cam No	FPS	Resolution	Bandwidth	1 Hour	1 Day	1 Month	HDD SIZE	HDD/Hour	HDD/Day
1 EA	15FPS	720 x 480	1.0Mbps	0.5GB	10.6GB	0.4TB	1000GB	1600Hr	75.4D

Figure 5. Expected Test Environment for HDD Capacity Check

2.9 CCTV Monitor Display Resolution

- Objective

  Main parts of CCTV Monitor are verified through human eyes.

  Check the CMS Software is showing properly on the monitor screen.

- Criteria

  CCTV Monitor Display Resolution: XVGA (1024x768 pixels)

- Test Methodology

  Refer to the above Test Configuration shown as Figure 6.

2.10 Operation & Combination test

- Objective

  Check the all equipments are working properly without an error and problem.

- Criteria

  Operation error is not allowed.

- Test Methodology

  CCTV system shall be able to be easily controlled by user on touch screen.

  Consist of the equipments as like Figure 6 and operate.

  Real time video images shall be shown on CCTV Monitor while being recorded in hard disk installed in DVR. The recorded video images shall be searched and played by operation of touch screen program.

  Lonworks communication data check the between MDS and DVR by “Lonscanner FX Protocol Analyzer” Tool or Serial Data check.

  Video Streaming data check used VLC by **SECTION 2.7**.

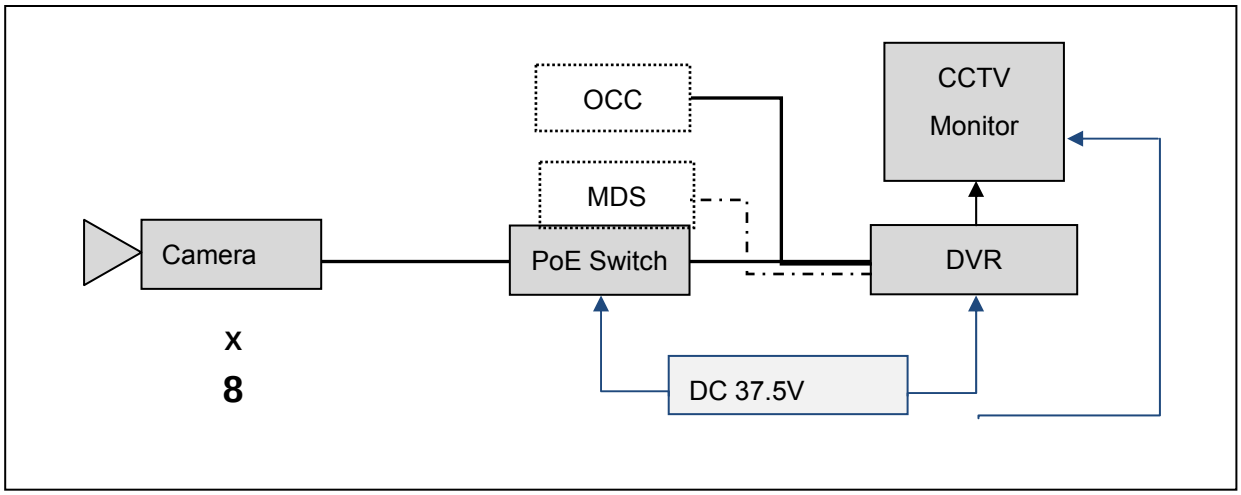

2.11 Aging test

- Objective

  Check that there is no problem on the temperature and operating when you operate the equipments for a long time.

- Criteria

  Operation error is not allowed.

- Test Methodology

  Test the equipment in basic operation for 72 hours in normal temperature condition. Normal temperature.

  It should be checked on proper operation and taking pictures. Checking the operation 36 hours later after starting the test, checking the operation 72 hours later after the test and test close.

2.12 Power supply range (Performance) test

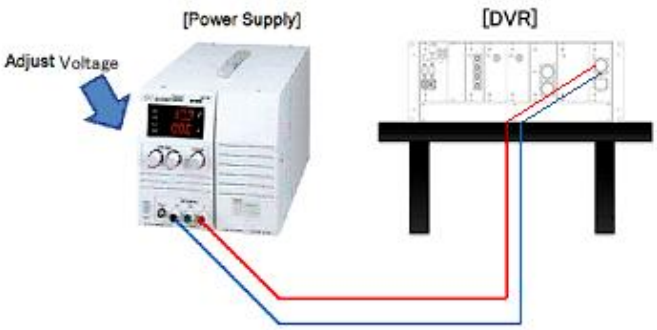

Figure 7. Expected Test Environment for Power supply range (Performance) test

- Objective

  Checking the operation is well when the voltage is changed in tolerance (-30%, +25%).

- Criteria

  It must run normally when the power supply is changed from DC 26 up to 47V.

- Test Methodology

  Checking the operation is well when the voltage is changed and the power input is connected to DC Power Supply as Figure 7.

2.13 Power consumption

- Objective

  Check the power consumption not to occur the deficiency of the power consumption.

- Criteria
- Standard value is following chart.

No.	Equipment	Drawing Ref.	Criteria
1	PoE(Power over Ethernet) Switch	DENVER-POE001	less than 160W
2	DVR(Digital Video Recorder)	DENVER-DVR001	less than 100W
3	CCTV MONITOR	DENVER-MON001	Less than 20W

Refer to the above Test Configuration shown as Figure 7.

- Test Methodology
- Power consumption which is measured by each of the input terminals shall conform to the standard values prescribed on the status of rated output.

2.14 Insulation Resistance Test

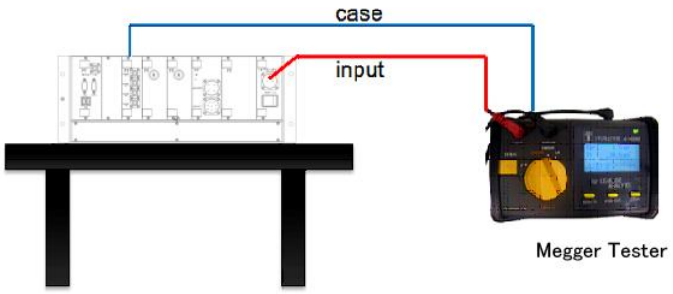

Figure 8. Expected Test Environment for Insulation Resistance Test

- Objective

Check the discharge & short first to check the insulation connecting the power input and case.

- Criteria

The insulation resistance must more than 10MΩ.

- Test Methodology

Measure the insulation resistance between all of the charged area and ground (-) using DC500V insulation resistance tester.

2.15 Voltage withstand Test

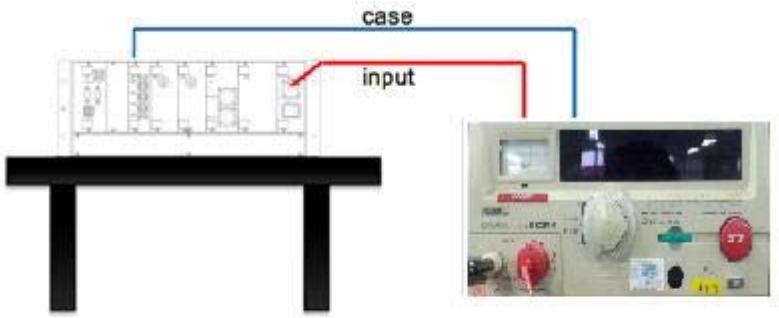

Figure 9. Expected Test Environment for Withstanding Voltage Tester.

- Objective

  Test that there is no damage on the power input and chassis in the regulation voltage.

- Criteria

  The test is passed if there is no insulation breakdown.

  Apply the AC 1075V, 60Hz for 1 minute and confirm.

- Test Methodology

  the voltage withstood between input terminal except of earth pin and earth stud. Refer to the above Test Configuration shown as Figure 9.

2.16 Temperature test

External Equipment operation check in temperature range between -35 ºC ~ 50 ºC and Internal Equipment operation check in temperature range between 0 ºC ~ 45 ºC which shall be checked with test certificate issued by External Test Facility.

- Criteria

  There shall be no problem during the temperature test.

2.16.1 Dry heat test (IEC 60068-2-2)

- Objective

  Check the proper operation in high temperature.

- Criteria

  There shall be no operation problem during the temperature test.

- Test Methodlogy

  This shall be carried out for 6 hours at 50±3℃ during which the equipment under the test shall be powered. Check the operation at 50 degrees for 6 hours. And check the operation again at 25 degrees.

Test time: During and After

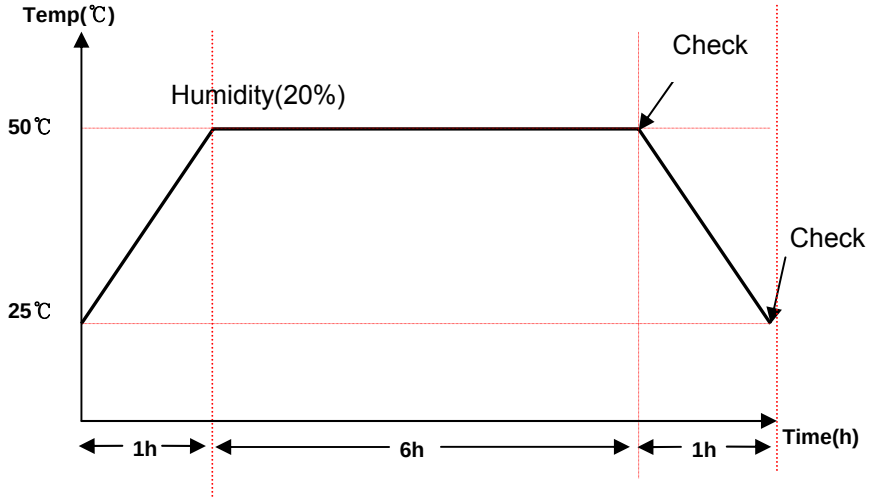

2.16.2 Damp heat test (IEC 60068-2-30)

- Objective

  Test not to occur the changes or damages because of the changes of temperature during the delivery.

- Criteria

  Equipments shall be operated properly without any changes or damages.

- Test Methodology

  This shall be carried out for 96 hours(8cycle) at 25℃~50℃ with relative humidity of 85±3% non-condensing. The specimen under the test shall not be powered. Test cycle: 2 cycles,

Check time: 24hour(2cycle)

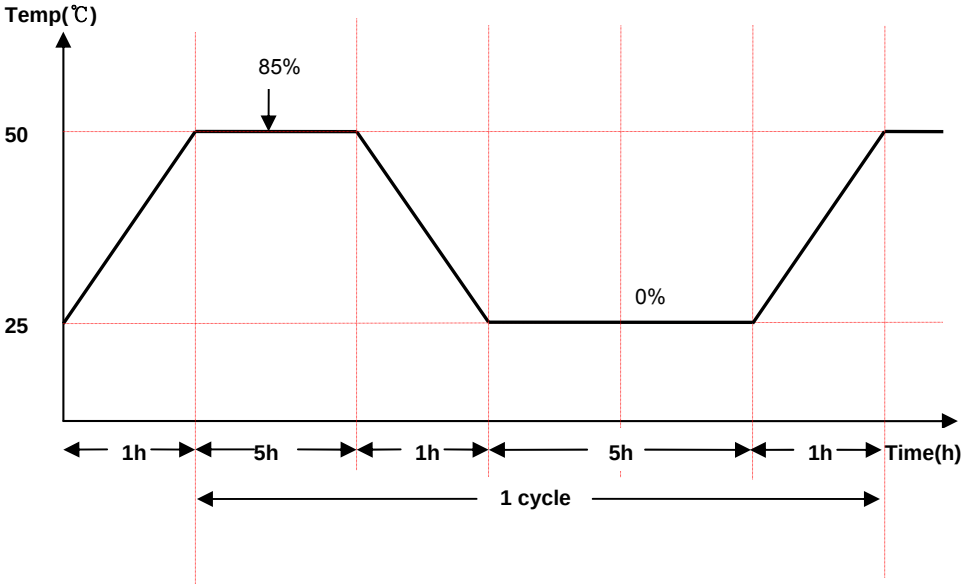

2.16.3 Cooling test (IEC 60068-2-1)

- Objective

  Check the operation well in the low temperature.

  The only Outside Cameras are applied

- Criteria

  -External Equipment shall be operated well after aging test in -20 degrees for 6 hours.

  -Internal Equipment shall be operated well after aging test in 0 degrees for 6 hours.

- Test Methodology

  External Equipment : This shall be carried out for 6 hours at -20℃.

  Internal Equipment : This shall be carried out for 6 hours at 0℃.

  The specimen under the test shall be powered during test duration.

Check time: After

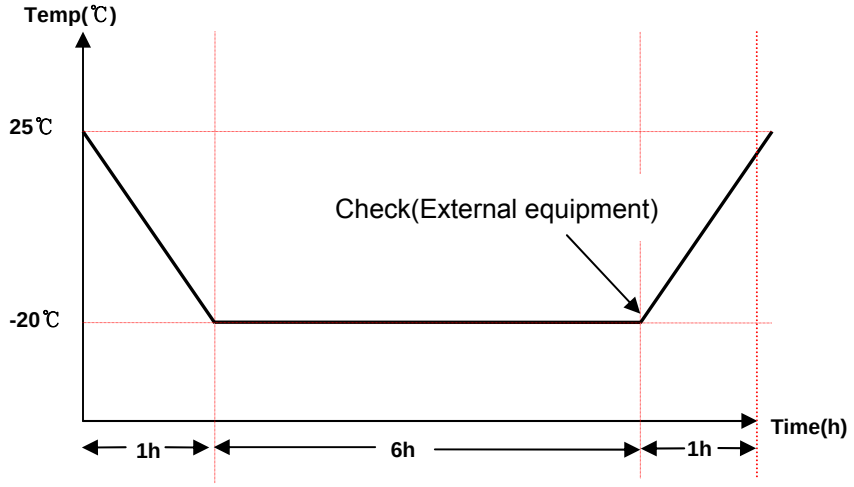

2.17 Semi-Conductor Burn-in Test

- Objective

All boards in the DENVER RTD CCTV are subjected to be burn-in with the following temperature profile. Considering the proof of the Semi-Conductor reliability inside PCB, TP 20.27.B (Reliability Standard), Burn-in Test mention on TP 20.28.D, will be standard.

- Criteria

After the test, there shall be no problem on assembling and operate well.

- Test Method

This Environmental Stress Screening (ESS) profile is based on Table 7.5-2 of the Reliability Toolkit: Commercial Practices Edition as published by the Reliability Information Analysis Center (RIAC). This ESS profile has been in use at Inter-M for electronics assemblies since DENVER RTD CCTV Proj.

Temperature Cycling Regimen

Characteristic	PWA[1]	Remark
Temperature range of hardware	-50°/+75℃ to -65°/+100℃	
Temperature rate of change of hardware[2]	10℃/min to 20℃/min	
Stabilization criterion	Stabilization has occurred when the temperature of the slowest-responding element in the hardware being screened is within 5 to 15℃ of the specified temperature extreme[3]	
Soak time of hardware at temperature extremes - if unmonitored - if monitored	5 min Long enough to perform functional testing	
Number of cycles	20 cycles to 40 cycles	
Equipment condition	Unpowered	

1. PWA guidelines apply to individual PWAs and to modules, such as flow-through electronic module consisting of one or two PWAs bonded to a heat exchanger.
2. Hardware temperature rate of change is limited by capabilities of ESS chambers.

3. It is up to the designer of the screening regimen to decide which elements (such as parts, the solder joints, the PWAs, and the connectors) of the hardware must be selected to determine the extreme temperatures in the thermal cycle. The temperature histories of the various elements in the hardware being screened are determined by means of a thermal survey. If equipment is operating, stabilization criterion may need to be based on the stabilized rate of change of the product rather than absolute temperature.

* Exception: Camera Image sensor

(Specific temperature of Video Image Sensor is out of specification.)

2.18 EMC test: IEC 62236-3-2 (External Test Facility)

The following tests are performed.

No.	Title	Standard number
1	Emission tests and limits	CISPR 11
2	Radiated Emissions	CISPR 11
3	Electrostatic Discharge immunity test	IEC 61000-4-2: Criterion B
4	Immunity to Radio –Frequency Electromagnetic Fields	IEC 61000-4-3: Criterion A
5	Electrical Fast Transient/Burst immunity test	IEC 61000-4-4: Criterion A
6	Surges immunity test	IEC 61000-4-5: Criterion B
7	Immunity to conducted disturbances inducted by radio-frequency filed	IEC 61000-4-6: Criterion A

2.18.1 Emission tests and limits

Shown in clause 2.16.1.1 and 2.16.1.2

2.18.1.1 Conducted Emissions

Testing is performed using the procedures contained in CISPR11

DC 37.5 V input to line port is measured.

- Criteria

The limits for conducted emission are as follows.

Frequency Range	Limits quasi – peak(Criteria)
9 kHz – 150 kHz	No limits

150 kHz – 500 kHz	99 dBμV
500 kHz – 30 MHz	93 dBμV

2.18.1.2 Radiated Emissions

Testing is performed using the procedures contained in CISPR11

Enclosure port is measured.

- Criteria

The limits for radiated emissions are as follows(10m distance).

Frequency Range	Field Strength(Criteria)
30 M – 230 MHz	40 dBμV/m
230 M – 1 GHz	47 dBμV/m

2.18.2 Immunity tests and severities

Performance criteria:

Criterion A

It will keep the condition for performance of equipment specification during the test or end of test:

Criterion B

The equipment performance shall be under standard during the test, but it shall be performed normally after the end of test.

2.18.2.1 Electrostatic Discharge immunity test

Testing is performed using the procedures contained in IEC 61000-4-2.

This test will be applied only to the equipment, which can be touched by operators of the train.

Performance Criterion B is applied.

Enclosure port is measured.

- Criteria

Equipment shall be operated well.

The test severity is as follows.

Discharge type	Contact Discharge	Air Discharge
Tested level	+/- 6.0 kV	+/- 8.0 kV

2.18.2.2 Immunity to Radio –Frequency Electromagnetic Fields

Testing is performed using the procedures contained in IEC 61000-4-3.

Performance Criterion A is applied.

Enclosure ports are measured.

The test severity is as follows.

Tested frequency	80 MHz – 1 GHz
Field strength	10 V/m
Amplitude modulation	1kHz 80% AM
Polarity of the antenna	Horizontal and Vertical
Sweep rate	Under 1.5 x 10^{-3} decade/s

2.18.2.3 Electrical Fast Transient/Burst immunity test

Testing is performed using the procedures contained in IEC 61000-4-4.

Performance Criterion A is applied.

DC 37.5 V input to line port is subject to the test severity as follows.

Tested level	+/- 2.0 kV
Burst duration	15 ms
Repetition rate	5 kHz
Tr/Th	5 ns/50 ns

2.18.2.4 Surges immunity test

Testing is performed using the procedures contained in IEC 61000-4-5.

Performance Criterion B is applied.

DC 37.5 V input to line is measured.

The test severity is as follows.

	Line - Ground	Line - Line
Tested level	+/- 2 KV	+/- 1 KV
Tr/Th	5 /50 us	

2.18.2.5 Immunity to conducted disturbances inducted by radio-frequency filed

Testing is performed using the procedures contained in IEC 61000-4-6.

Performance Criterion A is applied.

DC 37.5 V input to line is measured. The test severity is as follows.

Frequency Range	150 k – 80 MHz
Tested level	10 Vrms
Amplitude modulated	80% 1 kHz AM
Sweep rate	1.5×10^{-3} decade/s
Source impedance	150 ohm

2.19 Shock and Vibration test: IEC61373 (External Test Facility)

"Railway applications – Rolling stock equipment – Shock and vibrations tests" with test conditions: category 1, class A. Test severity and frequency range for Random vibration test is as follows:

- Objective

  The objective of this section is to verify that the CCTV System can withstand appropriate shock and vibration levels for car mounted CCTV equipment

- Criteria

  After the test, there shall be no problem on assembling and operate well.

  The CCTV System must function properly during the test. At the completion of the tests, the CCTV System must pass the requirements of the production test specification with the exception of the hi-pot and megger tests

- Pre-inspection

  If not performed prior to this test, perform the functional portion of the CCTV production test specification.

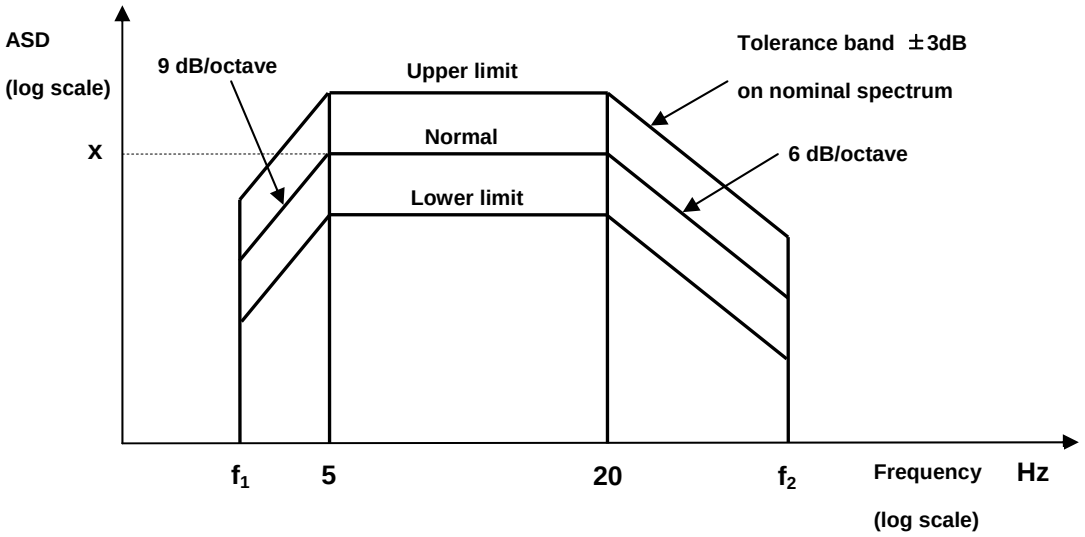

2.19.1 Vibration test

- Test Methodology

Test severity and frequency range for each vibration test is as follows:

Test	Severity & Frequency	Vertical	Transverse	Longitudinal
Random Vibration	ASD Level : [m/s²] ²/Hz	0.0164	0.0041	0.0073
	RMS Value : [m/s²]	0.75	0.37	0.50
	Frequency range	5~20Hz : ASD level, 20~150Hz : -6dB/ octave		
Simulated long life test (by increased random vibration)	ASD Level : [m/s²] ²/Hz	1.034	0.250	0.452
	RMS Value : [m/s²]	5.9	2.9	3.9
	Test time	5hr	5hr	5hr
	Frequency range	5~20Hz : ASD level, 20~150Hz : -6dB/ octave		

2.19.2 Shock test

- Test Methodology

Test severity, pulse shape and direction for shock test is as follows:

Test	Vertical	Transverse	Longitudinal
Peak acceleration: [m/s²]	30	30	50
Nominal Duration: [ms]	30	30	30
Number of shocks: Total 18 shocks	6 shock (positive 3 & negative 3)	6 shock (positive 3 & negative 3)	6 shock (positive 3 & negative 3)
Pulse shape	Half sine	Half sine	Half sine

Apply a series of three positive and three negative pulses at a level A of 3g and a nominal duration D of 30 milliseconds. The shock profile is shown in below Figure. During the performance of this test, allow an interval of 10 to 15 seconds between pulses.

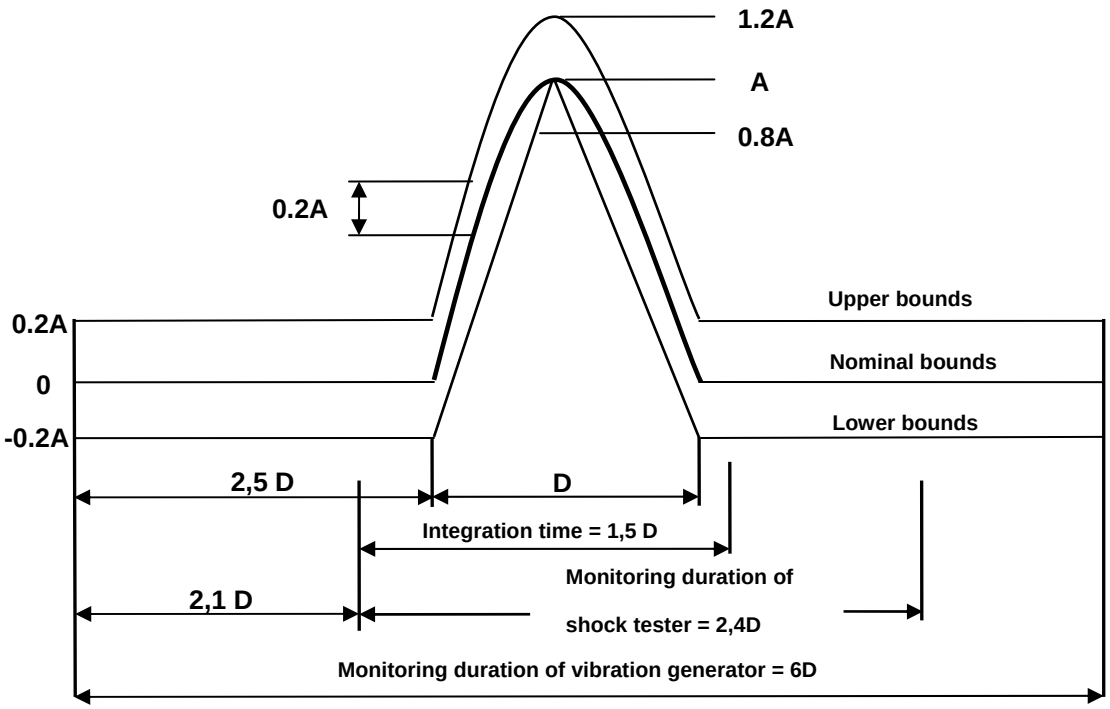

Inspection sheet

Project	**Denver Fastrack Eagle Project**	**Test date**		.
Equipment	**Interior camera**	**Authorized Supervisor**		
Manufacturer	**Inter-M**	**INSPECTOR**	**Hyundai Rotem**	
Drawing. No.	**DENVER-INT001**		**Inter-M**	
Test type	Design Qualification Test	**Test result**		
Measuring Instrument	Vernier Calipers, Weigh scale, Web browser, Drawing, Spec Sheet.			

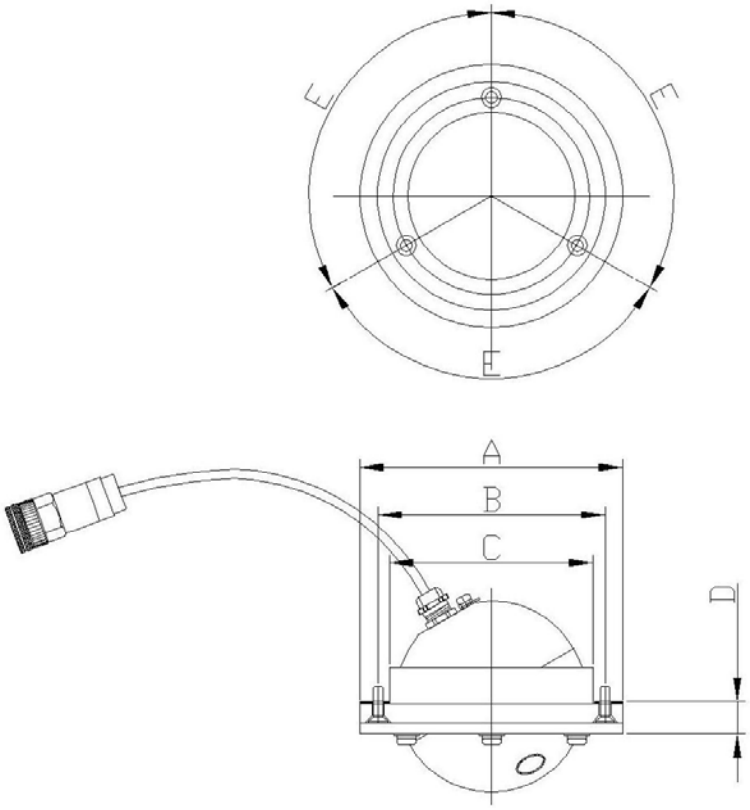

Test Items		Test Method and Criteria		Measured Data	Pass or Fail
Mechanical Inspection	**Visual Inspection**	To check that with drawings			
	Dimensional Check (mm)	A	Φ4.33”[Φ110mm]		
		B	Φ3.74”[Φ95mm]		
		C	Φ3.35”[Φ85mm]		
		D	0.53”[13.5mm]		
		E	120º		

Test items	Test criteria	Measured data	Pass or Fail
Appearance Inspection	Check visually for crack defect or bad paintings or an abnormal appearance. Check visually according to the approved drawing. Check the status of fixing		
Dimension examination	Check dimension visually according to the approved drawing.		
Weight	Less than 1.0kg		
PoE (Power Over Ethernet) Test	Check operation status test after connecting Cameras to LAN ports of PoE.		
Video Resolution Variable Test	Change and check resolution change with Web Browser		
Video Frame Rate Test	Change and check frame rate change with Web Browser		
Protocol Test	TCP, UDP, IP, HTTP, DHCP, RTP, RTSP, Web Brower		
Multi Streaming Test	Compression method check with web browser: H.264		
Viewing Area	Horizontal: 120° Vertical: 110°		
Operation & Combination	Operation without problem		
Aging	Operation without problem		
Temperature Test	Check on test certificate in spec sheet.		
EMI Test	It will be tested by external licensed facility, which has provision and certification of EMI Test.	It will be provided the certified test record	
EMS Test	It will be tested by external licensed facility, which has provision and certification of EMS Test.	It will be provided the certified test record	

Vibration & Shock Test	It will be tested by external licensed facility, which has provision and certification of Shock & Vibration.	It will be provided the certified test record	
Recognition Test for Distance,	Write below Test sheet by setting Rotakin Chart on each Distance.		

Remarks:

-ROTAKIN TEST

Distance from camera	Criteria	Test Result
10m	Should be distinguishable whether it is human or not	☐ Pass ☐ Fail
5m	Should be distinguishable whether who is male or female	☐ Pass ☐ Fail
3m	Appearance should be identified	☐ Pass ☐ Fail

Angle of view range	Criteria	Test Result
Horizontal	Max 120˚	□ Pas □ Fail
Vertical	Max 110˚	□ Pass □ Fail

Project	**Denver Fastrack Eagle Project**	**Test date**		
Equipment	**Outside Camera**	**Authorized Supervisor**		
Manufacturer	**Inter-M**	**INSPECTOR**	**Hyundai Rotem**	
Drawing. No.	**DENVER-OS001**		**Inter-M**	
Test type	Design Qualification Test	**Test result**		
Measuring Instrument	Vernier Calipers, Weigh scale, Web browser, Drawing, Spec Sheet.			

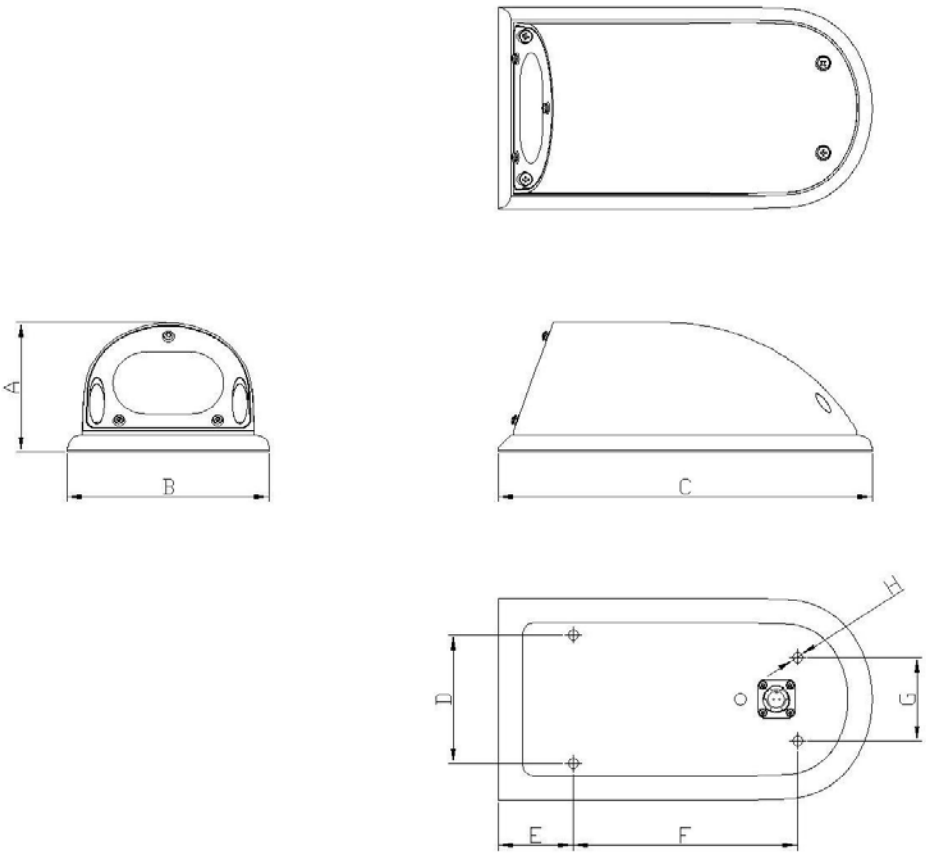

Test Items		Test Method and Criteria		Measured Data	Pass or Fail
Mechanical Inspection	Visual Inspection	To check that with drawings			
	Dimensional Check (mm)	A	3.43”[87mm±1]		
		B	5.31”[135mm]		
		C	9.84”[250mm]		
		D	3.39”[86mm±1]		
		E	1.97”[50mm±1]		
		F	5.91”[150mm±1]		
		G	2.2”[56mm±1]		
		H	Φ0.28”[Φ7mm]		

Test items	Test criteria	Measured data	Pass or Fail
Appearance Inspection	Check visually for crack defect or bad paintings or an abnormal appearance. Check visually according to the approved drawing. Check the status of fixing		
Dimension examination	Check dimension visually according to the approved drawing.		
Weight	Less than 3.2kg		
PoE (Power Over Ethernet) Test	Check operation status test after connecting Cameras to LAN ports of PoE.		
Video Resolution Variable Test	Change and check resolution change with Web Browser		
Video Frame Rate Test	Change and check frame rate change with Web Browser		
Protocol Test	TCP, UDP, IP, HTTP, DHCP, RTP, RTSP, Web Brower		
Multi Streaming Test	Compression method check with web browser: H.264		
Viewing Area	Horizontal: 35° Vertical: 25°		
Operation & Combination	Operation without problem		
Aging	Operation without problem		
Temperature Test	Check on test certificate in spec sheet.		

EMI Test	It will be tested by external licensed facility, which has provision and certification of EMI Test.	It will be provided the certified test record	
EMS Test	It will be tested by external licensed facility, which has provision and certification of EMS Test.	It will be provided the certified test record	
Vibration & Shock Test	It will be tested by external licensed facility, which has provision and certification of Shock & Vibration.	It will be provided the certified test record	
Recognition Test for Distance,	Write below Test sheet by setting Rotakin Chart on each Distance.		

Remarks:

-ROTAKIN TEST

Distance from camera	Criteria	Test Result
20m	Should be noticeable Whether it is moving or not	□ Pass □ Fail
10m	Should be distinguishable to the object which is man or not.	□ Pass □ Fail
5m	Appearance should be identifiable	□ Pass □ Fail

Angle of View range	Criteria	Test Result
Hori ontal	Max 35˚	□ Pass □ Fail
ertical	Max 25˚	□ Pass □ Fail

Lighting	Criteria	Test Result
WDR	WDR should be operated within 5-seconds on the lighting to camera	□ Pass □ Fail

Night	Criteria	Test Result
Day & Night	At 0.05-lux, Day & Night should be operated	□ Pass □ Fail

Project	**Denver Fastrack Eagle Project**		**Test date**	
Equipment	**Front Facing Camera**		**Authorized Supervisor**	
Manufacturer	**Inter-M**	**INSPECTOR**	**Hyundai Rotem**	
Drawing. No.	**DENVER-FFC001**		**Inter-M**	
Test type	Design Qualification Test		**Test result**	
Measuring Instrument	Vernier Calipers, Weigh scale, Web browser, Drawing, Spec Sheet.			

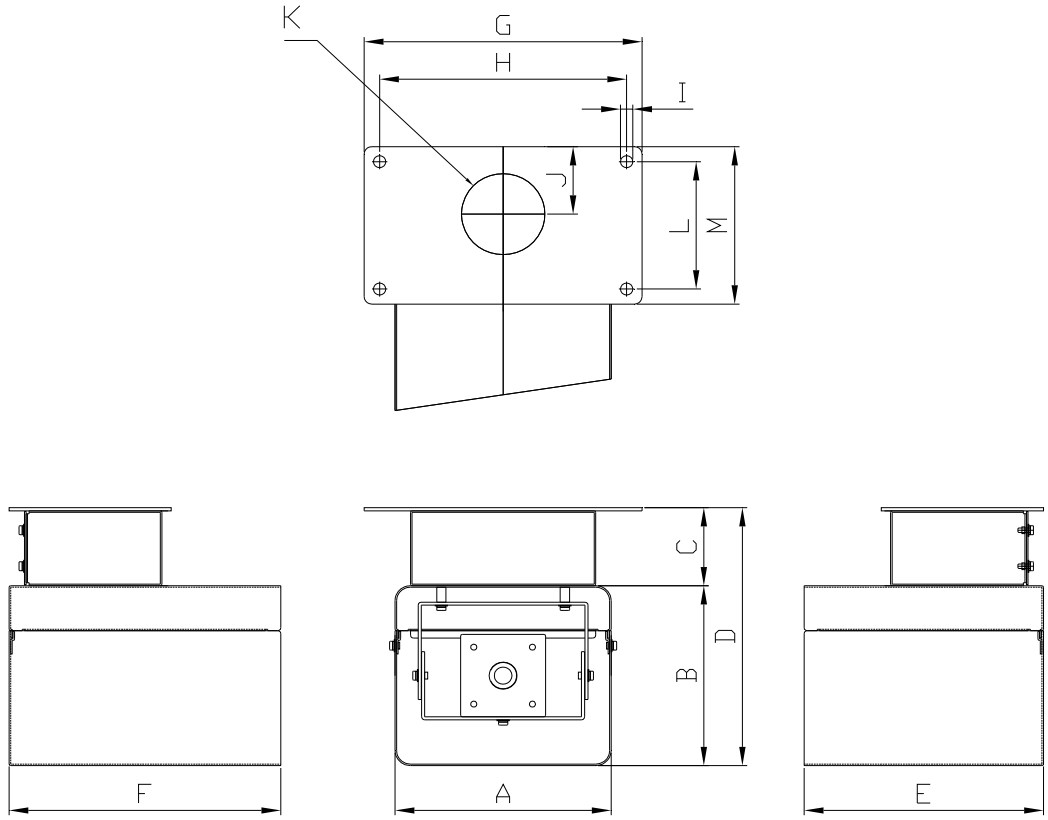

Test Items		Test Method and Criteria		Measured Data	Pass or Fail
Mechanical Inspection	**Visual Inspection**	To check that with drawings			
	Dimensional	A	5.51”[140mm]		

	Check (mm)	B	4.72”[120mm]		
		C	2.05”[52mm]		
		D	6.77”[172mm±1]		
		E	6.1”[155mm]		
		F	6.93”[176mm]		
		G	7.09”[180mm]		
		H	6.3”[160mm±1]		
		I	0.31”[8mm]		
		J	1.77”[45mm]		
		K	Φ2.13”[Φ54mm]		
		L	3.35”[85mm±1]		
		F	4.13”[105mm]		

Test items	Test criteria	Measured data	Pass or Fail
Appearance Inspection	Check visually for crack defect or bad paintings or an abnormal appearance. Check visually according to the approved drawing. Check the status of fixing		
Dimension examination	Check dimension visually according to the approved drawing.		
Weight	Less than 2.5kg		
PoE (Power Over Ethernet) Test	Check operation status test after connecting Cameras to LAN ports of PoE.		
Video Resolution Variable Test	Change and check resolution change with Web Browser		
Video Frame Rate Test	Change and check frame rate change with Web Browser		
Protocol Test	TCP, UDP, IP, HTTP, DHCP, RTP, RTSP, Web Brower		
Multi Streaming Test	Compression method check with web browser: H.264		
Viewing Area	Horizontal : 66° Vertical : 48°		
Operation & Combination	Operation without problem		
Aging	Operation without problem		

Temperature Test	Check on test certificate in spec sheet.		
EMI Test	It will be tested by external licensed facility, which has provision and certification of EMI Test.	It will be provided the certified test record	
EMS Test	It will be tested by external licensed facility, which has provision and certification of EMS Test.	It will be provided the certified test record	
Vibration & Shock Test	It will be tested by external licensed facility, which has provision and certification of Shock & Vibration.	It will be provided the certified test record	
Recognition Test for Distance,	Write below Test sheet by setting Rotakin Chart on each Distance.		

Remarks:

-ROTAKIN TEST

Distance from camera	Criteria	Test Result
20m	Should be noticeable Whether it is moving or not	□ Pass □ Fail
10m	Should be distinguishable to the object which is man or not.	□ Pass □ Fail
5m	Appea ance should be identifiable	□ Pass □ Fail

Angle of view range	Criteria	Test Result
Horizontal	Max 66˚	□ Pass □ Fail
Vertical	Max 48˚	□ Pass □ Fail

Lighting	Criteria	Test Result
WDR	WDR should be operated within 5-seconds on the lighting to c mera	□ Pass □ Fail

Night	Criteria	Test Result
Day & Night	At 0.05-lux, Day & Night should be operated	□ Pass □ Fail

Project	**Denver Fastrack Eagle Project**	**Test date**		
Equipment	**CAB Camera**	**Authorized Supervisor**		
Manufacturer	**Inter-M**	**INSPECTOR**	**Hyundai Rotem**	
Drawing. No.	**DENVER-CAB001**		**Inter-M**	
Test type	Design Qualification Test	**Test result**		
Measuring Instrument	Vernier Calipers, Weigh scale, Web browser, Drawing, Spec Sheet.			

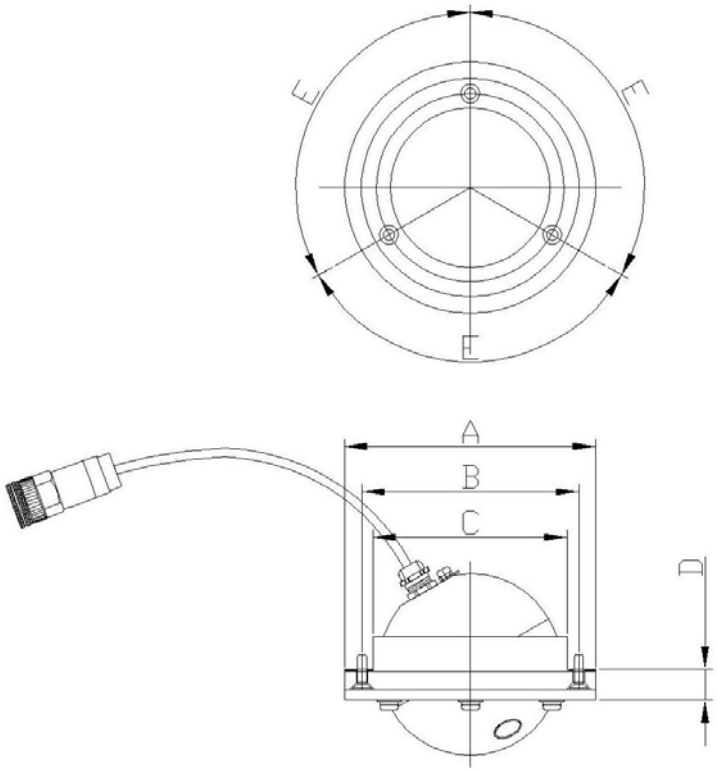

Test Items		Test Method and Criteria		Measured Data	Pass or Fail
Mechanical Inspection	Visual Inspection	To check that with drawings			
	Dimensional Check (mm)	A	Φ4.33"[Φ110mm]		
		B	Φ3.74"[Φ95mm]		
		C	Φ3.35"[Φ85mm]		
		D	0.53"[13.5mm]		
		E	120º		

Test items	Test criteria	Measured data	Pass or Fail
Appearance Inspection	Check visually for crack defect or bad paintings or an abnormal appearance. Check visually according to the approved drawing. Check the status of fixing		
Dimension examination	Check dimension visually according to the approved drawing.		
Weight	Less than 1.0kg		
PoE (Power Over Ethernet) Test	Check operation status test after connecting Cameras to LAN ports of PoE.		
Video Resolution Variable Test	Change and check resolution change with Web Browser		
Video Frame Rate Test	Change and check frame rate change with Web Browser		
Protocol Test	TCP, UDP, IP, HTTP, DHCP, RTP, RTSP, Web Brower		
Multi Streaming Test	Compression method check with web browser: H.264		
Viewing Area	Horizontal: 43.6° Vertical: 33.4°		
Operation & Combination	Operation without problem		
Aging	Operation without problem		
Temperature Test	Check on test certificate in spec sheet.		
EMI Test	It will be tested by external licensed facility, which has provision and certification of EMI Test.	It will be provided the certified test record.	
EMS Test	It will be tested by external licensed facility, which has provision and certification of EMS Test.	It will be provided the certified test record.	

Vibration & Shock Test	It will be tested by external licensed facility, which has provision and certification of Shock & Vibration.	It will be provided the certified test record.	
Recognition Test for Distance,	It's the camera to see the operator desk area Located in the train cab. So It will not be tested for the distance of Recognition.		

Remarks:

-ROTAKIN TEST

Distance from camera	Criteria	Test Result
N.A.	Should be displayed the operator desk at inactive CAB through CCTV Monitor at active CAB	☐ Pass ☐ Fail

Angle of view range	Criteria	Test Result
Horizontal	Max 43.6˚	□ Pass □ Fail
Vertical	Max 33.4˚	□ Pass □ Fail

Project	**Denver Fastrack Eagle Project**	**Test date**		
Equipment	**Digital Video Recorder**	**Authorized Supervisor**		
Manufacturer	**Inter-M**	**INSPECTOR**	**Hyundai Rotem**	
Drawing. No.	**DENVER-DVR001**		**Inter-M**	
Test type	Design Qualification Test	**Test result**		
Measuring Instrument	Vernier Calipers, Drawing, Weight scale, DC Power Supply			

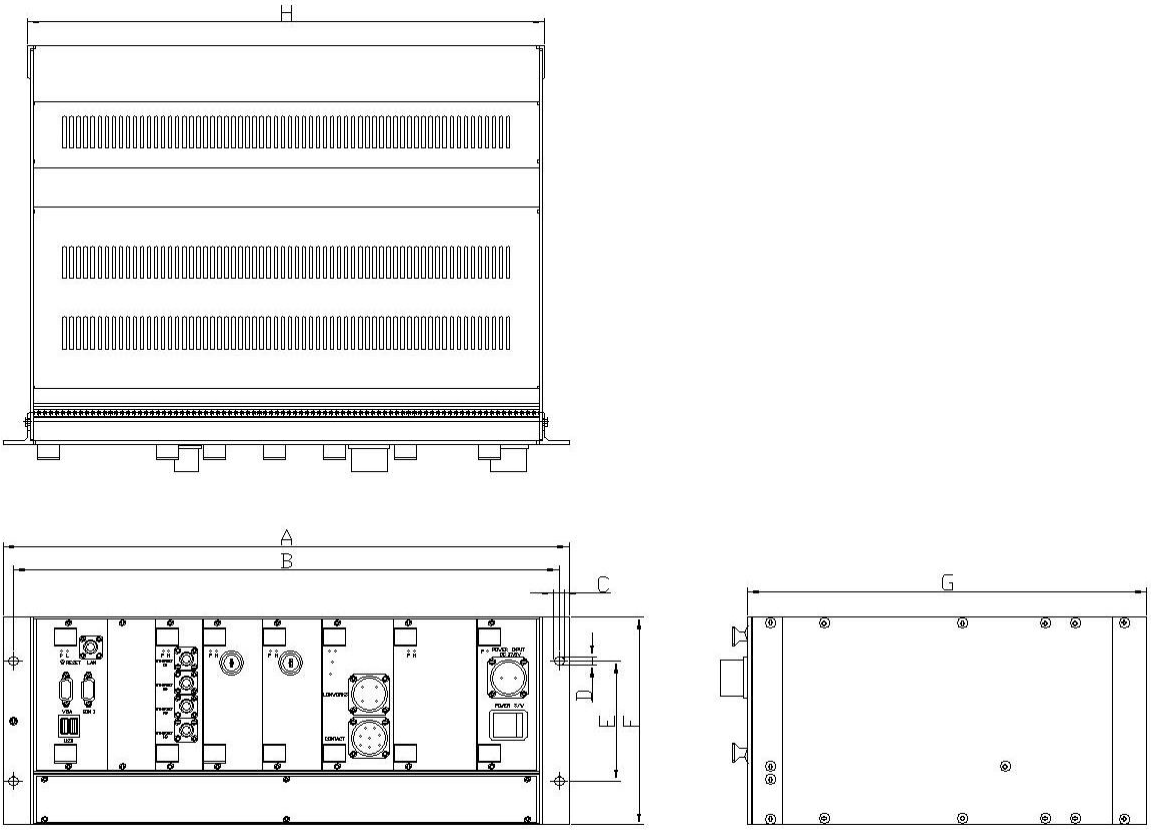

Test Items		Test Method and Criteria		Measured Data	Pass or Fail
Mechanical Inspection	Visual Inspection	To check that with drawings			
	Dimensional Check (mm)	A	19”[482.6mm]		
		B	18.31”[465mm±1]		
		C	0.35”[9mm±1]		
		D	0.3”[7.5mm]		
		E	4.02”[102mm±1]		
		F	6.97[177mm]		
		G	13.39”[340mm]		
		H	17.36”[441mm±1]		

Test items	Test criteria	Measured data	Pass or Fail
Appearance Inspection	Check visually for crack defect or bad paintings or an abnormal appearance. Check visually according to the approved drawing. Check the status of fixing		
Dimension examination	Check dimension visually according to the approved drawing.		
Weight	Less than 10kg		
Recording	72hours		
HDD Capacity Test	Check on HDD capacity directly or check on control panel of O/S (500GX2)		
Operation & Combination	Operation without problem		
Aging	Operation without problem		
Power supply change (Performance Test)	When applying DC 37.5V (DC26V ~ 47V) at the room temperature, there should not be any failure on the performance.		
Power Consumption	less than 100W (DC37.5 V)		
Insulation Resistance	More than 10Mohm		
Voltage withstand test	After applying AC 1000V, 60Hz for one minute, there should not be any failure on the devices		
Temperature Test	Check on test certificate in spec sheet.		

EMI Test	It will be tested by external licensed facility, which has provision and certification of EMI Test.	It will be provided the certified test record	
EMS Test	It will be tested by external licensed facility, which has provision and certification of EMS Test.	It will be provided the certified test record	
Vibration & Shock Test	It will be tested by external licensed facility, which has provision and certification of Shock & Vibration.	It will be provided the certified test record	
Remarks:			

Project	**Denver Fastrack Eagle Project**	**Test date**		
Equipment	**PoE Switch**	**Authorized Supervisor**		
Manufacturer	**Inter-M**	**INSPECTOR**	**Hyundai Rotem**	
Drawing. No.	**DENVER-POE001**		**Inter-M**	
Test type	Design Qualification Test	**Test result**		
Measuring Instrument	Vernier Calipers, Drawing, Weigh scale, DC Power Supply, Insulation Tester			

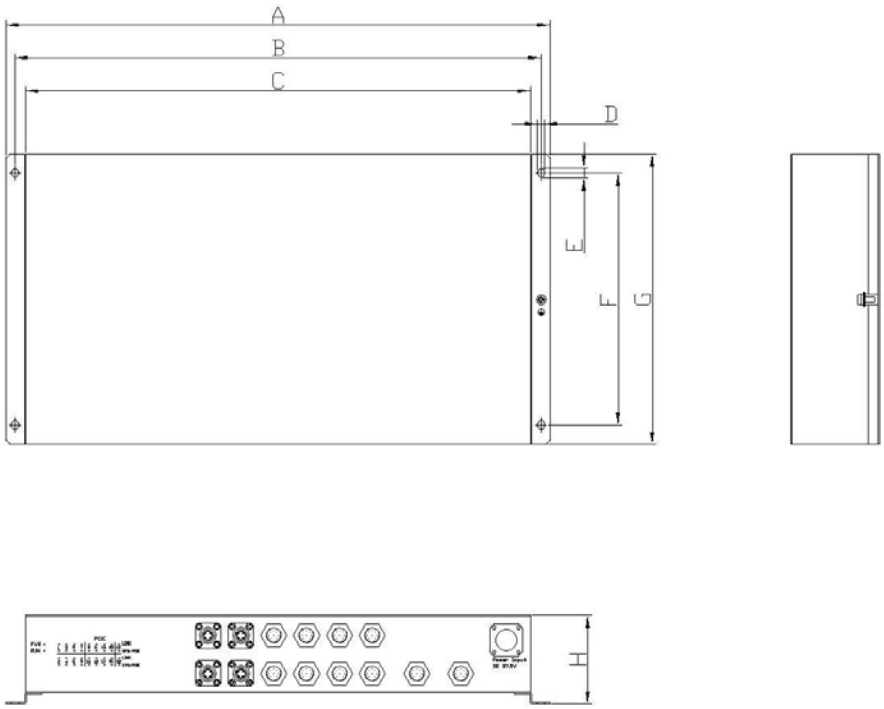

Test Items		Test Method and Criteria		Measured Data	Pass or Fail
Mechanical Inspection	Visual Inspection	To check that with drawings			
	Dimensional Check (mm)	A	16.93”[430mm]		
		B	16.38”[416mm±1]		
		C	15.71”[399mm]		
		D	0.24”[6mm]		
		E	0.31”[8mm]		
		F	7.87[200mm±1]		
		G	9.06”[230mm]		
		H	2.76”[70mm]		

Test items	Test criteria	Measured data	Pass or Fail
Appearance Inspection	Check visually for crack defect or bad paintings or an abnormal appearance. Check visually according to the approved drawing. Check the status of fixing		
Dimension examination	Check dimension visually according to the approved drawing.		
Weight	Less than 4.5kg		
PoE Test	Check operation PoE status test after connecting Cameras to LAN ports of PoE.		
Operation & Combination	Operation without problem		
Aging	Operation without problem		
Power supply change (Performance Test)	When applying DC 37.5V (DC26V ~ 47V) at the room temperature, there should not be any failure on the performance		
Power Consumption	less than 160W (DC37.5 V)		
Insulation Resistance	More than 10Mohm		
Voltage withstand test	After applying AC 1000V, 60Hz for one minute, there should not be any failure on the devices		

Temperature Test	Check on test certificate in spec sheet.		
EMI Test	It will be tested by external licensed facility, which has provision and certification of EMI Test.	It will be provided the certified test record	
EMS Test	It will be tested by external licensed facility, which has provision and certification of EMS Test.	It will be provided the certified test record	
Vibration & Shock Test	It will be tested by external licensed facility, which has provision and certification of Shock & Vibration.	It will be provided the certified test record	
Remark :			

Project	**Denver Fastrack Eagle Project**	**Test date**		
Equipment	**CCTV Monitor**	**Authorized Supervisor**		
Manufacturer	**Inter-M**	**INSPECTOR**	**Hyundai Rotem**	
Drawing. No.	**DENVER-MON001**		**Inter-M**	
Test type	Design Qualification Test	**Test result**		
Measuring Instrument	Vernier Calipers, Weigh scale, Drawing, Spec Sheet			

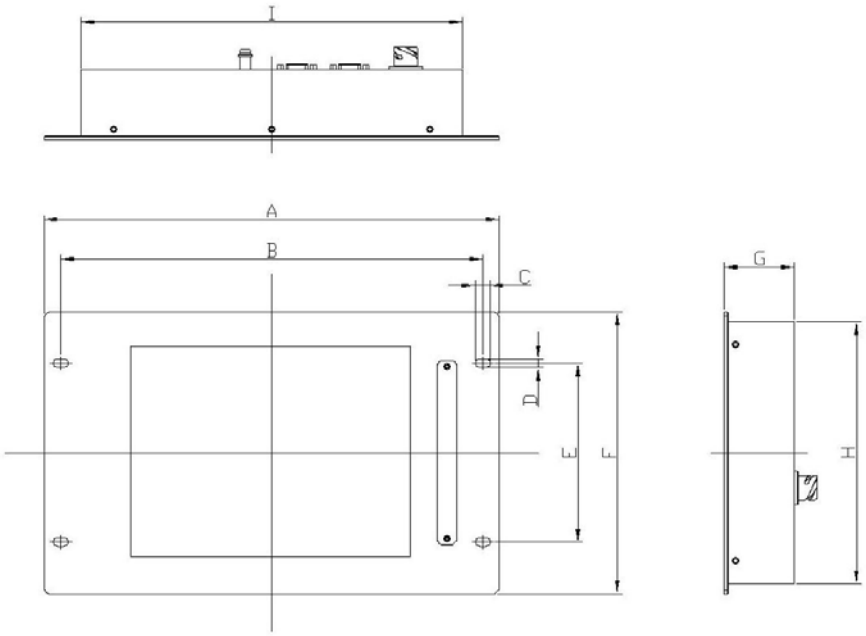

Test Items		Test Items		Measured Data	Pass or Fail
Mechanical Inspection	**Visual Inspection**	To check that with drawings			
	Dimensional Check (mm)	A	13.58”[345mm]		
		B	12.6”[320mm±1]		
		C	0.33”[8.5mm]		

		D	0.26”[6.5mm]		
		E	5.35”[136mm±1]		
		F	8.43[214mm]		
		G	2.09”[53mm]		
		H	7.83”[199mm]		
		I	10.98”[279mm]		

Test items	Test criteria	Measured data	Pass or Fail
Appearance Inspection	Check visually for crack defect or bad paintings or an abnormal appearance. Check visually according to the approved drawing. Check the status of fixing		
Dimension examination	Check dimension visually according to the approved drawing.		
Weight	Less than 3.4kg		
Display Resolution	Check the video display of laptop computer and whether or not the resolution of XVGA(1024x768) is provided after being connected to terminal.		
Operation & Combination	Operation without problem		
Aging	Operation without problem		
Temperature Test	Check on test certificate in spec sheet.		
EMI Test	It will be tested by external licensed facility, which has provision and certification of EMI Test.		
EMS Test	It will be tested by external licensed facility, which has provision and certification of EMS Test.		
Vibration & Shock Test	It will be tested by external licensed facility, which has provision and certification of Shock & Vibration.		

Remarks: